DECO GLAMOUR

DECO GLAM OVAL DRINKS TROLLEY - SILVER

ITEM CODE: 364866

Assembly Instruction

A	B	C	D
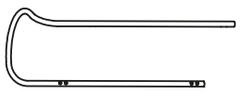	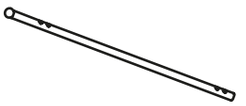	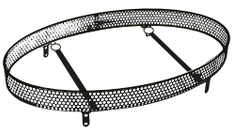	
1PC	2PCS	2PCS	2PCS

E	F	G	H	I
2PCS	2PCS	16PCS	1PC	1PC

STEP 1

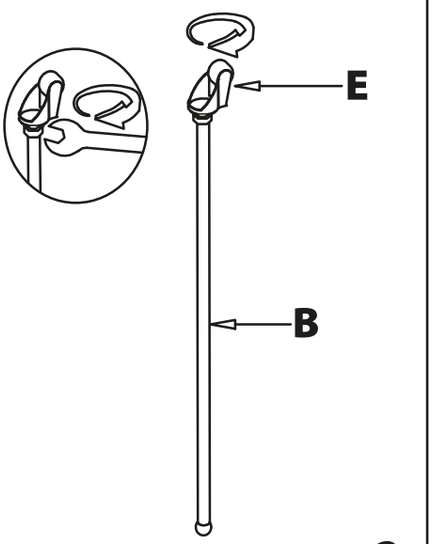

STEP 2

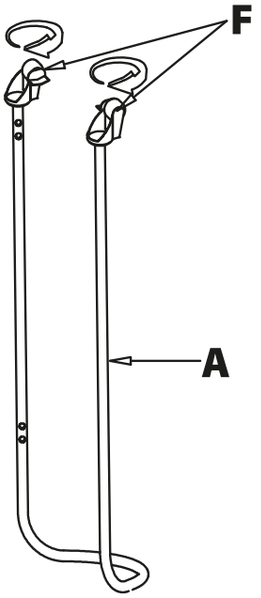

STEP 3

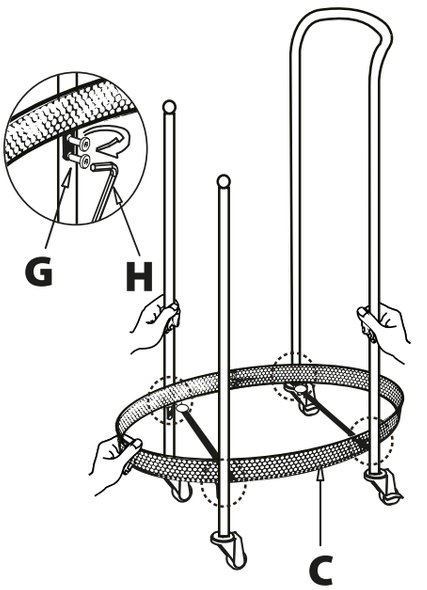

STEP 4

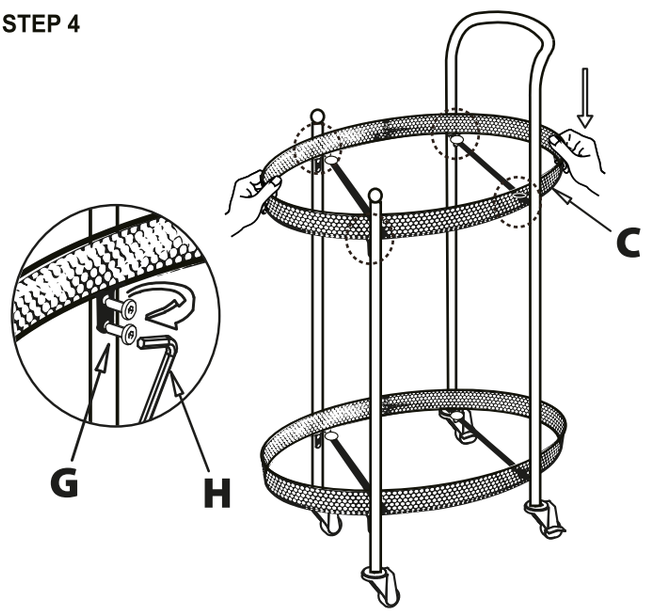

STEP 5

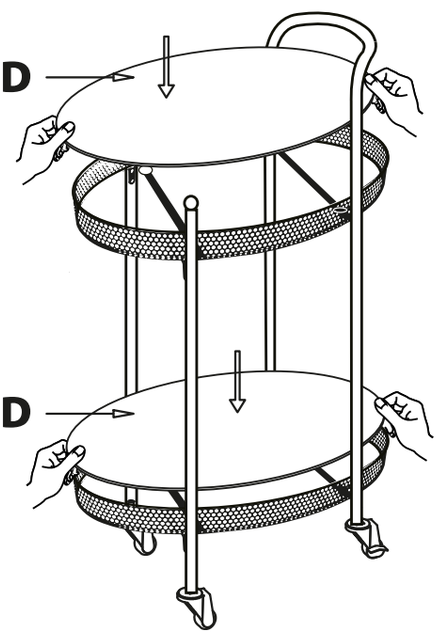

Domestic use only

Made in China

Max. Loading: 10kg (5kg per shelf)

Maunfactured for
B&M Retail Ltd,
L24 8RJ, UK